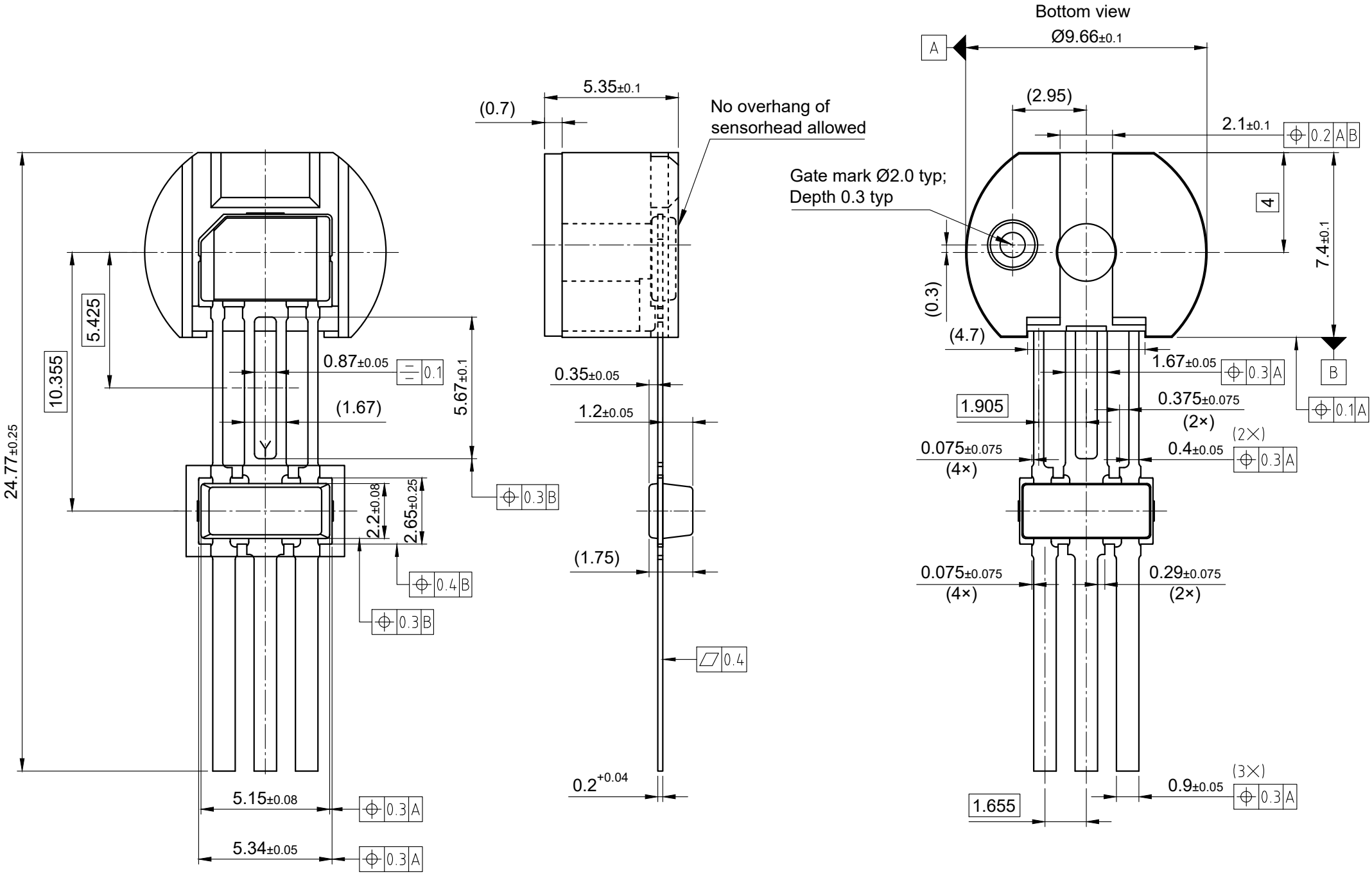

Outer dimension does not include mold flash, gate burr, protrusion or Intrusion of 0.15 max. Per side
All dimensions are in units mm
The drawing is in compliance with ISO 128-30, Projection Method 1 [ ]
Drawing according to ISO 8015, general tolerances